Glenn

Patent
Pending
Design.

Made
In The
USA.

Milling/ Mounting Template

Bracket Length (in.)

78

|

- → Holds 1000 lbs
- → Fits Solid & Hollow Shelves
- → Ultra Mega Easy To Install
- → Delivers Major Street Cred

Weight Class

MD

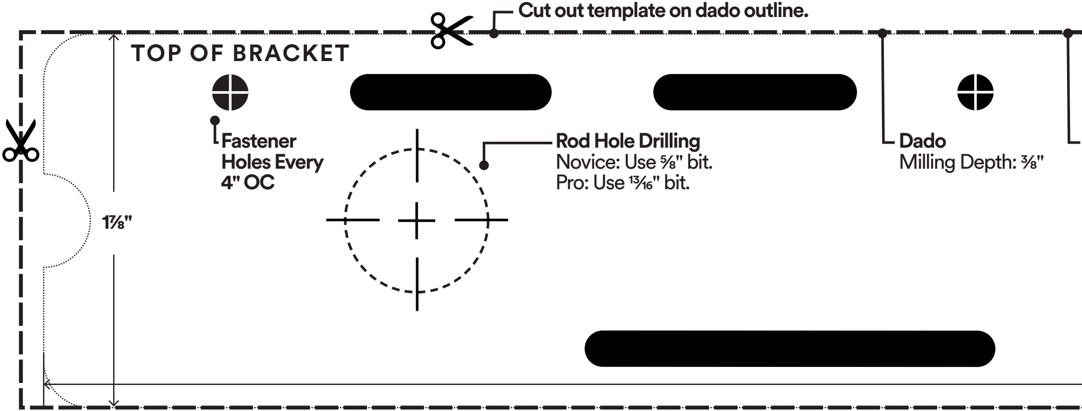

Cut out template on dado outline.

Fastener Holes Every 4" OC

Rod Hole Drilling
Novice: Use ⅝" bit.
Pro: Use 13⁄16" bit.

Dado
Milling Depth: ⅜"

Need a hand? **Speak with a Shelf Geek at 949.244.1083 or hello@shelfology.com today.**

Call	949.244.1083
Email	hello@shelfology.com
Shop	www.shelfology.com
Visit	156 N 2nd E Rexburg, ID 83440
Social	@shelfology

Scan here to get seriously righteous downloads and tips for your shiny new bracket on our website!

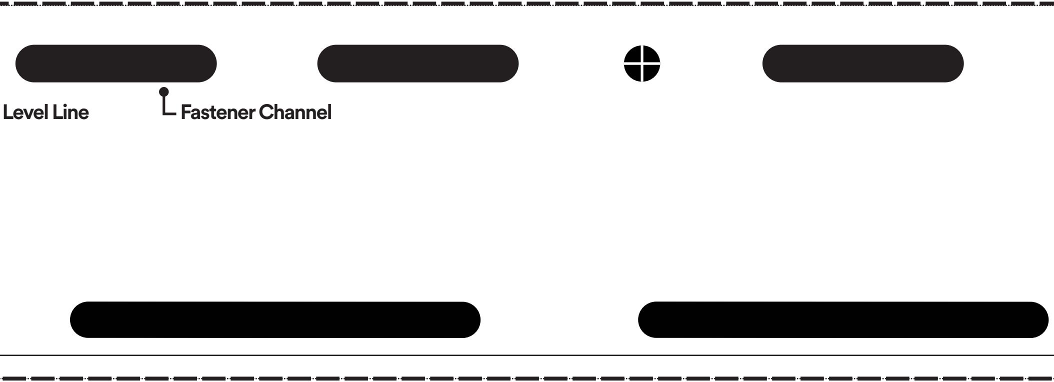

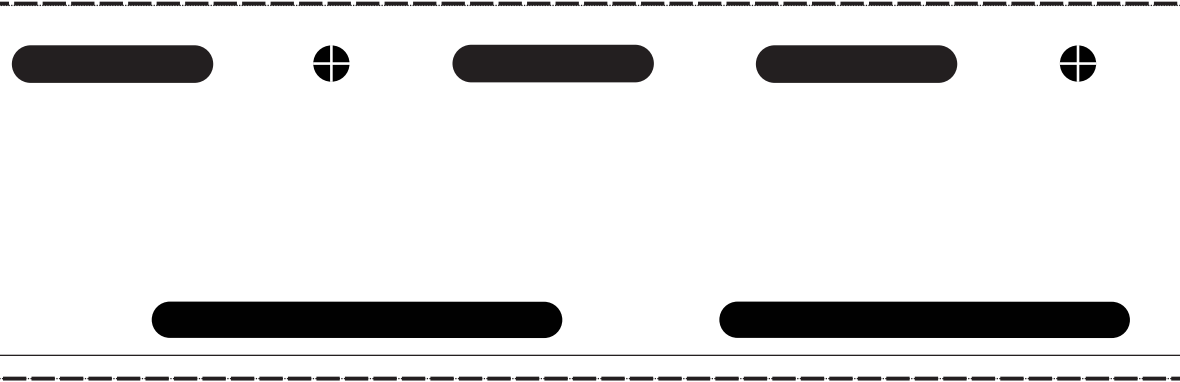

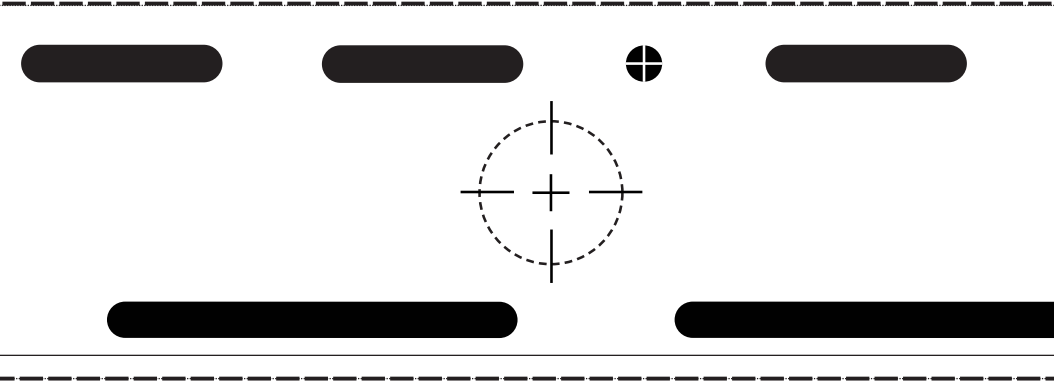

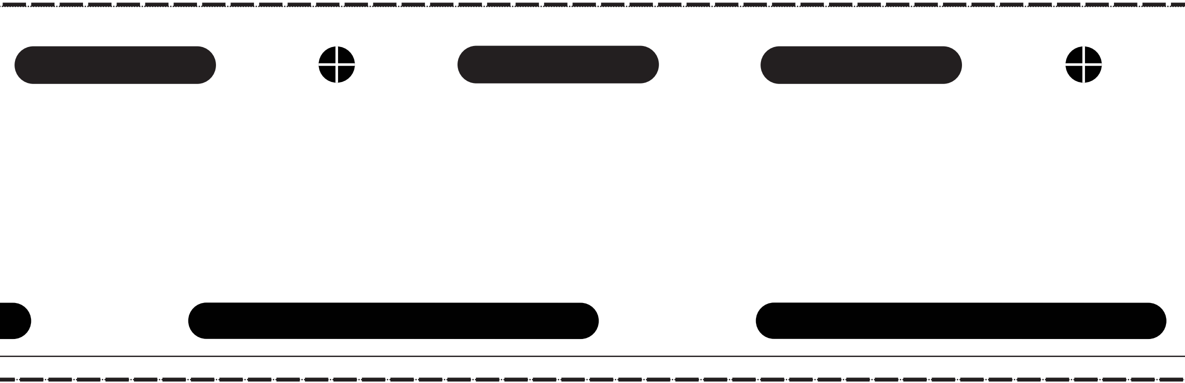

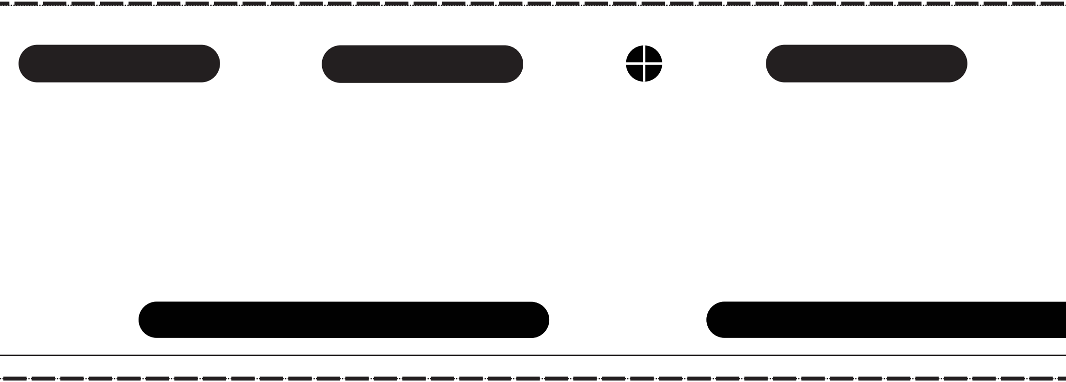

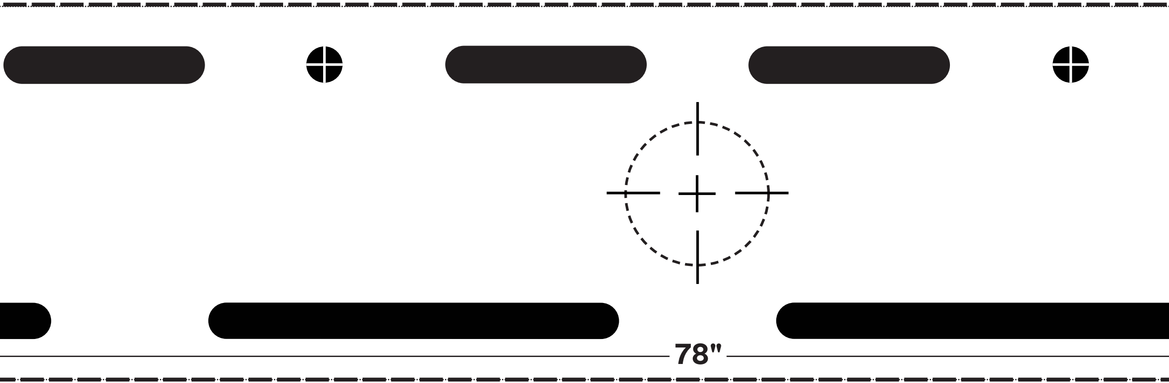

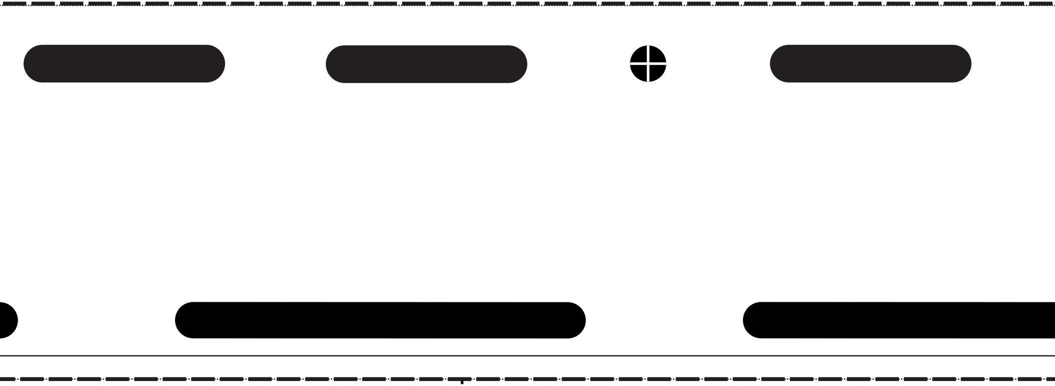

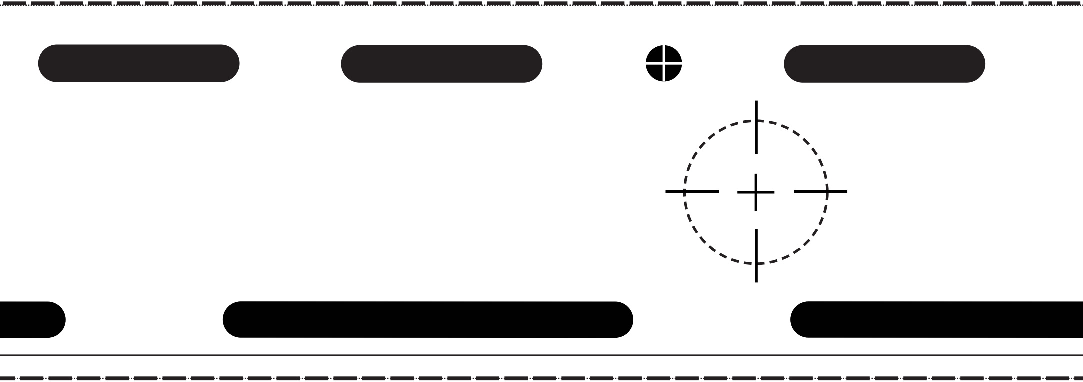

RECLAIM
RECLAIM
YOU

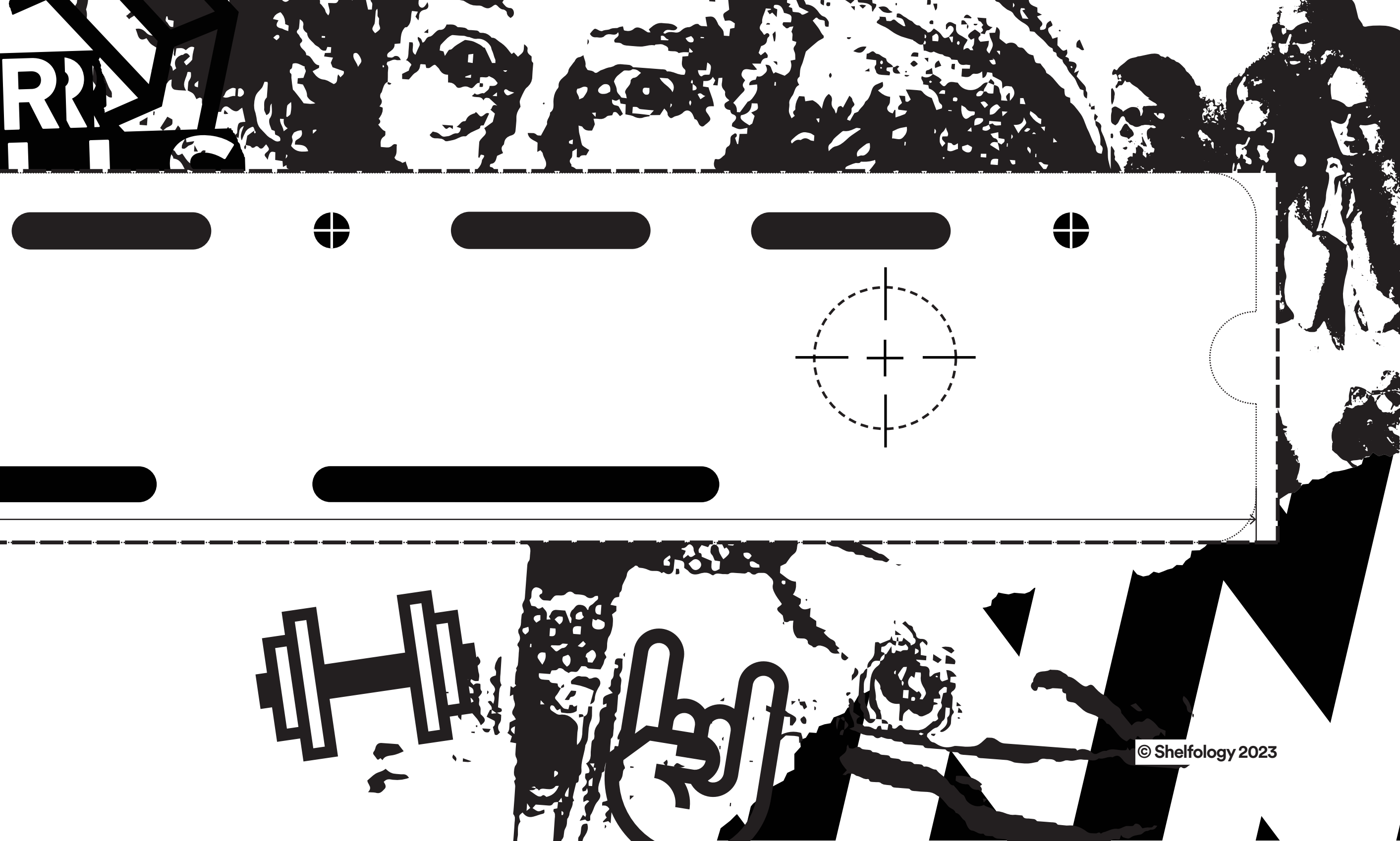

© Shelfology 2023