Shelfology
Certified Rad™_

Designed & Crafted
By Radically Talented
Humans Right Here In
The U.S. Of Awesome_

Patent
Pending
Design.

The
Original
Bracket.

Glenn System
Install Guide

Installation Difficulty Rating (1-10)

Table of Contents	Page
Installation Steps	004
Warnings	006
Rad Tips	007

Required Tools

- Drill
- Level
- Measuring Tape
- Phillips-head Screwdriver

Optional Tools

- Pencil
- ¼" Diameter Drill Bit
- Stud Finder

GET MORE RADNESS NOW AT SHELFOLOGY.COM_
NEED A HAND? 949.244.1083 // HELLO@SHELFOLOGY.COM_

START ↓↓

Add some serious warm + cozy vibes to your fireside nest with the Glenn floating mantel system.

Designed & Crafted By Radically Talented Humans Right Here In The U.S. Of Awesome.

What's In The Box

Glenn Bracket
1x

Glenn Mantel Slab
1x

Wall Fastener Set
1x

Wall Anchor Set
1x

What You'll Need

Innate Radness
Done!

Your Favorite Soda
2x

Silicone
1x

DESIGNED & CRAFTED BY RADICALLY TALENTED HUMANS RIGHT HERE IN THE U.S. OF AWESOME.

LIGHTNING FAST LEAD TIMES_

Installation Steps

001

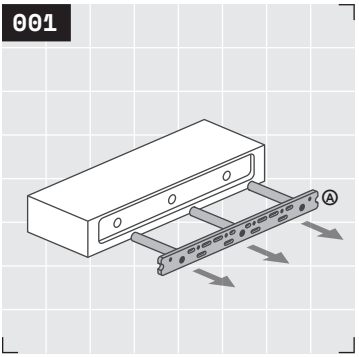

Let's dive in, homies! Remove your Glenn bracket from the back of the mantel. Put mantel aside.

Ⓐ Dog ear cutouts on the ends of the back bar allow for easy bracket removal from a mantel slab. Simply use a screwdriver or chisel as a wedge to gently pry the back bar out of the slab. Work on both ends of the bracket equally to slowly remove the bracket.

002

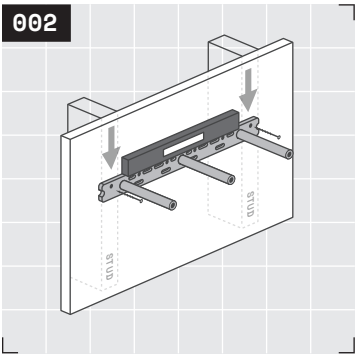

Orient your bracket on the wall so the hole and channel pattern across the top of your bracket face up. Use a drill to install a fastener in either far left or right hole. Level your bracket, set another fastener in the opposite end hole with your drill. If you have installed blocking behind the full length of your bracket, skip to step 6. If you have not installed blocking, proceed to step 3. For more information on blocking, see **Rad Tip ①** on page 7.

003

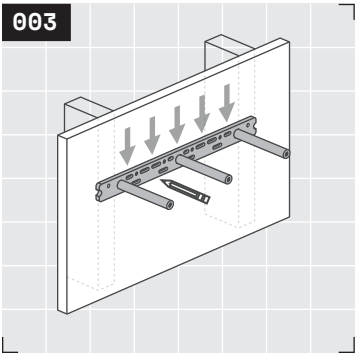

Mark all fastener holes and channels with a pencil. Once every fastener location has been marked, uninstall both fasteners and remove your bracket from the wall. Take a swig of your favorite soda or non-alcoholic brew.

GET MORE RADNESS NOW AT SHELFOLOGY.COM_
NEED A HAND? 949.244.1083 // HELLO@SHELFOLOGY.COM_

DESIGNED & CRAFTED BY RADICALLY TALENTED HUMANS RIGHT HERE IN THE U.S. OF AWESOME.

LIGHTNING FAST LEAD TIMES_

004

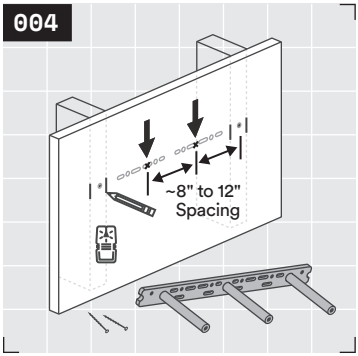

Use a stud finder to mark the location of every stud the bracket crosses. Then for areas between studs, mark one or two drywall anchor install locations roughly every eight to twelve inches or less along the length of the bracket depending on the stud spacing in your wall.

005

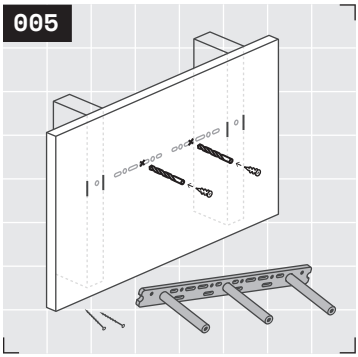

Predrill each masonry or drywall anchor location with a ¼" drill bit to avoid breaking wall anchors. Install a wall anchor in each of these pre-drilled locations. If you are using your own anchors, we recommend Toggler brand for best results. Stud and blocking locations should not be pre-drilled. Wall anchors should be installed flush with the wall surface.

006

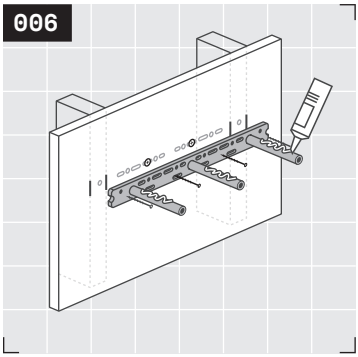

Replace the bracket and install a fastener into every location crossing a stud or blocking. Make a final inspection of your bracket. Check for bracket sag, confirm bracket is correctly secured to wall. To correct sag, see **Rad Tip ② and ③** on page 7. Ensure a wall anchor and fastener is installed every four to six inches in all masonry and drywall areas. Apply 100% silicone generously to each rod on the bracket. Take another swig of that sweet, sweet soda...you get me?

007

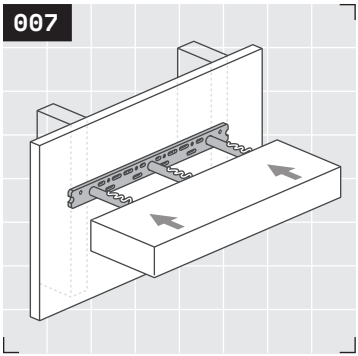

Slide your radical hardwood mantel onto bracket. Allow silicone to cure for eight hours.

Finish off your soda, it's time to celebrate your innate awesomeness! You finished the mantel install and deserve heaps of adulation. If you need more help, please reach out to a shelf geek today.

hello@shelfology.com
949.244.1083

Whoa, you made it! We are vicariously stoking for you right now. Post your sweet shelfie on Instagram now!

@shelfology
#radshelfie

Need a hand? Speak with a Shelf Geek at 949.244.1083 or hello@shelfology.com today.

How did we do? You'll get an email soon asking for a product review, and we'd be stoked if you oblige. You rock in advance!

Warnings

① Correct Install Required For Safe Use

1.1 Mantel brackets must be correctly installed into studs or wall blocking. Failure to do so may result in sagging mantels, falling objects, or serious injury.

② Adhere To The Capacity Rating Of Your Specific Bracket

2.1 Every Shelfology bracket weight class and length has been engineered for use with specific mantel capacities/dimensions. Failure to follow our specified capacity ratings and correct mantel dimensions may result in sagging mantels, falling objects, or serious injury. For more information, reference the Glenn Specifications Sheet.

③ California Proposition 65 Warning

3.1 This product contains chemicals known to the State of California to cause cancer and birth defects or other reproductive harm. Don't eat this bracket. If you live outside of California, do whatever you want. For more boring information, visit www.p65warnings.ca.gov.

④ This Product May Make Others Incredibly Jealous

4.1 Any Shelfology Certified Rad™ product should be flaunted with caution around friends, loved ones, and even complete strangers, as minimal or extreme jealousy may occur. Shelf responsibly.

Rad Tips

① Fasten Into All Studs & Blocking The Bracket Crosses

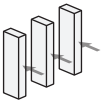

1.1 Studs are the vertical 2x4 boards that make up the bones of your walls. They provide solid structure for your mantel to attach to.

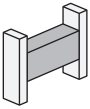

1.2 Blocking is typically added later between studs in the wall for additional support to mount mantels to, and is usually made from 2x4 or 2x6 lumber.

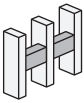

1.3 For a contractor grade install with best substrate strength, install blocking along the length of your bracket.

② Using Shims With Your Bracket

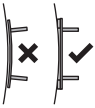

2.1 If your wall is not straight, use shims to ensure your bracket is installed straight across the wall face and square to the wall. The mantel slab and bracket will properly mate only if the bracket is straight and plum.

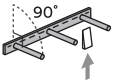

2.2 If your bracket continues to sag after correct install, use wood shims underneath the backbar to adjust front to back level.

③ Optional Fastener Shim Method

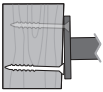

3.1 As another option, wall fasteners may be installed behind the bracket's bottom channels and used as adjustable shims. These should only be used in locations backed by a stud or blocking. Drywall anchors will not offer enough support once real force is applied.

Once your bracket has been positioned on the wall, simply mark the lower slots with a pencil where they cross a stud or blocking, then remove your bracket and begin installing fasteners in the marked locations.

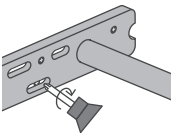

3.2 Once your bracket is reinstalled over the top of these fastener shims, use your drill to make small adjustments to how proud each fastener head rests.

④ How To Choose Your Fastener Type

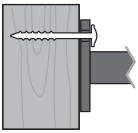

4.1 Truss Head: Use the supplied truss head style wood fasteners in areas that cross studs or blocking with holes and channels that are not countersunk.

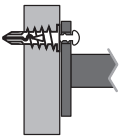

4.2 Pan Head: For drywall or masonry, use the supplied pan head fasteners with the included drywall or masonry anchors.

DESIGNED & CRAFTED BY RADICALLY TALENTED HUMANS RIGHT HERE IN THE U.S. OF AWESOME.

LIGHTNING FAST LEAD TIMES_

Shelfology | Way To Display™

Need a hand? **Speak with a Shelf Geek at 949.244.1083 or hello@shelfology.com today.**

How did we do? **You'll get an email soon asking for a product review, and we'd be stoked if you oblige. You rock in advance!**

Call	949.244.1083
Email	hello@shelfology.com
Shop	www.shelfology.com
Visit	156 N 2nd E Rexburg, ID 83440
Social	@shelfology

© Shelfology 2025